Figure 2.2 identifies and describes the model strings.

Figure 2.2
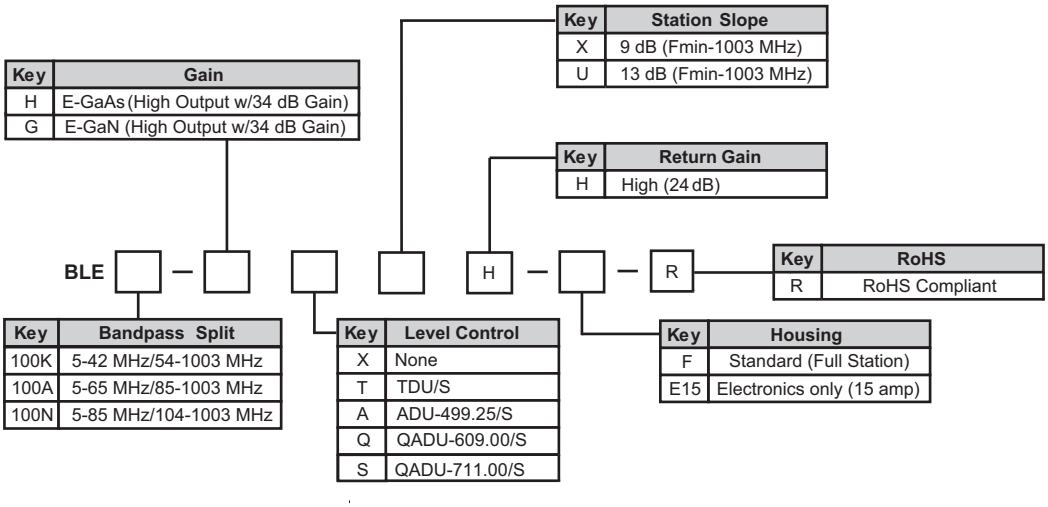
BLE100 ordering matrix